Plow Blade Installer Cart Webinar

Zoom Meeting Platform User Information

- Participants are currently muted.
- A Question and Answer Session will follow presentations.
- Use Zoom Q & A button to ask questions at any time during the presentations.
- The webinar is being recorded and will be shared on the AII website at aii.transportation.org.

Agenda

1. Overview of AII Program
2. Speaker Introductions
3. Plow Blade Installer Cart Overview
   - Usage of Cart for removing and replacing blades
   - Assembling the Cart
   - Benefits, lessons learned and available resources
4. Question and Answer Session with Panel

AASHTO
Technical Service Programs
Guidelines
Management
Solutions
AASHTO STRUCTURES GUIDELINES
AASHTO MATERIALS GUIDELINES
AASHTO DESIGN GUIDELINES
AASHTO INNOVATION MANAGEMENT
AASHTO WINTER WEATHER MANAGEMENT
AASHTO PRESERVATION MANAGEMENT
AASHTO EQUIPMENT MANAGEMENT
AASHTO RESILIENCE & SUSTAINABILITY MANAGEMENT
AASHTO SAFETY MANAGEMENT
AASHTO PERFORMANCE MANAGEMENT
AASHTO SAFETY HARDWARE MANAGEMENT
AASHTO TRANSIT MANAGEMENT
AASHTO RAIL MANAGEMENT
AASHTO ENVIRONMENTAL MANAGEMENT
AASHTO AASHTOWare SOLUTIONS
AASHTO RADIO FREQUENCY SOLUTIONS
AASHTO PRODUCT EVALUATION & AUDIT SOLUTIONS
AASHTO TECHNICAL TRAINING SOLUTIONS
AASHTO STEM OUTREACH SOLUTIONS
AASHTO CENSUS TRANSPORTATION SOLUTIONS

- Established in 1999 and operating since 2000
- Facilitate the implementation of **high-payoff**, **ready-to-use**, **innovative technologies**
- **100+ innovations**

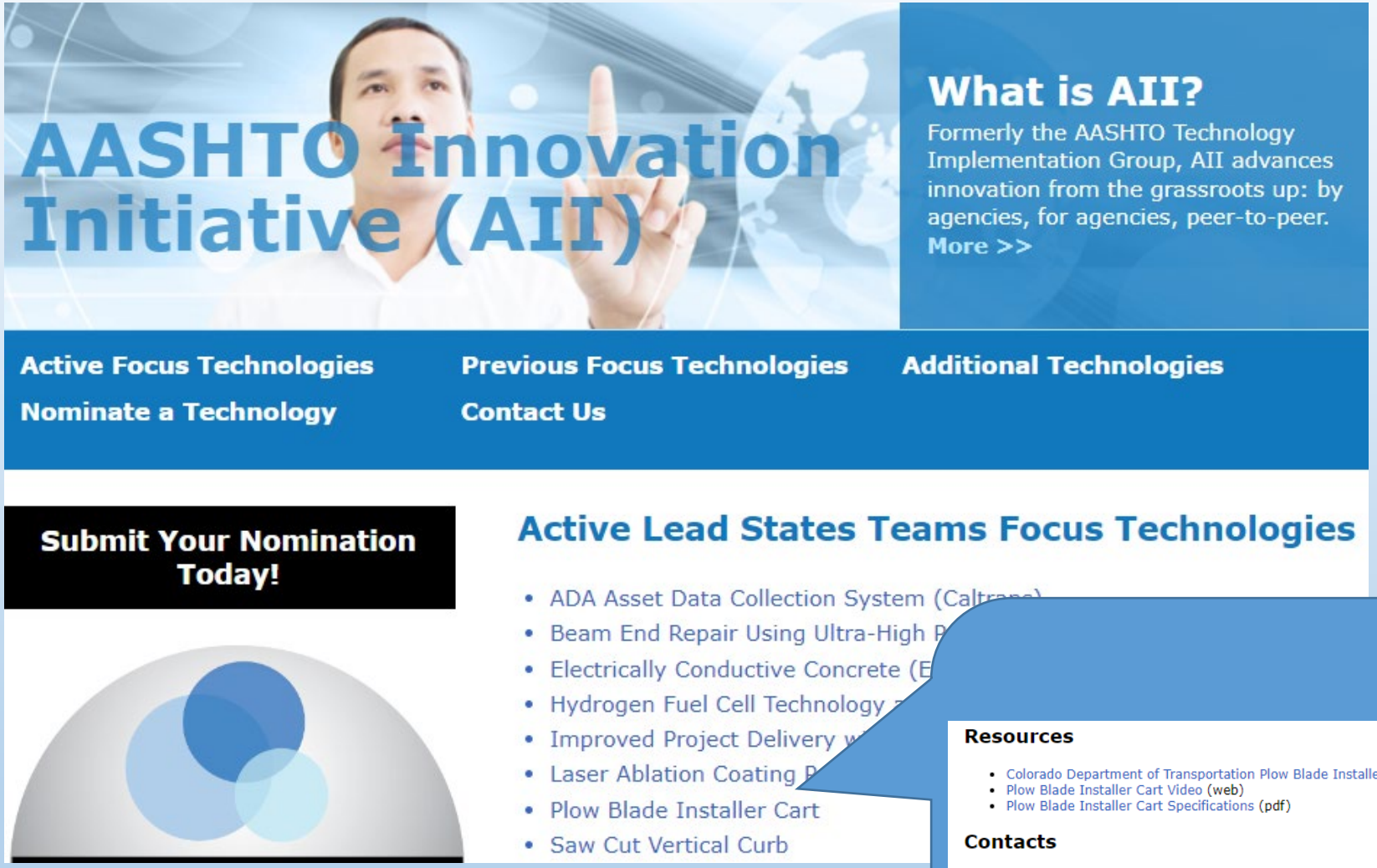

aii.transportation.org

Speakers

COLORADO
Department of Transportation

From left to right: Chuck Kline, Jeff Ercul, Brian Manguso and John Pickard (JP)

Participant Poll

Improving Safety With the Plow Blade Installer Cart

Maintenance

https://sites.google.com/state.co.us/process-improvement/lei-innovation-engagement-services/idea-cards

Plow Blade Installer Cart Overview

Chuck Kline, CDOT

Introduction

- Snow plow attachments have replaceable plow blades on their rim/bottom edges (6 to 9 feet long)
- Plow blades require periodic removal and replacement
  - Undergo wear and tear
  - Often multiple times during the winter
- Traditional method for blade replacement
  - Requires a two-person team
  - Poses safety risks to personnel
- CDOT designed a Plow Blade Installer Cart to improve safety and efficiency

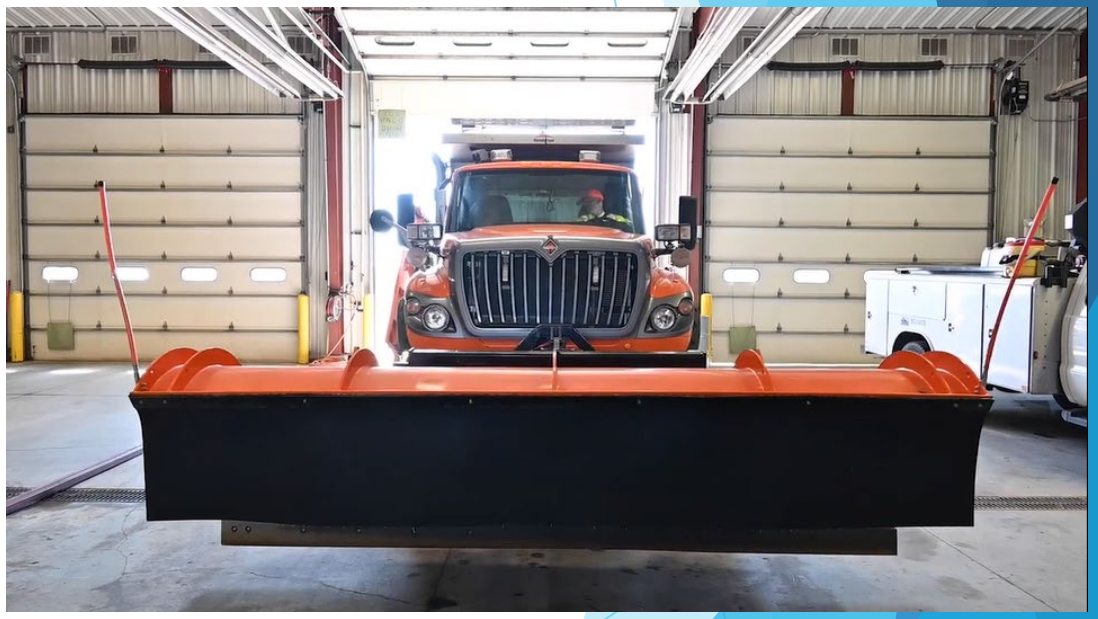

Plow Blade Installer Cart Video

Plow Blade Installer Cart Video

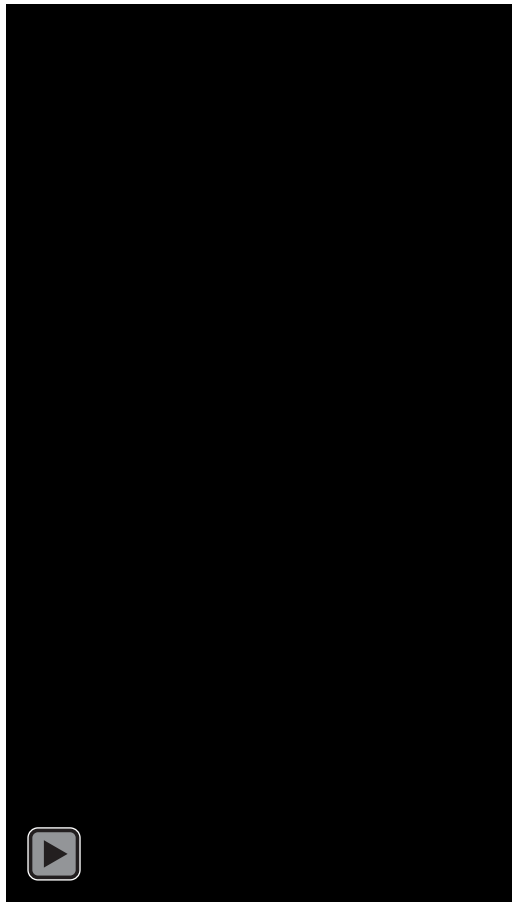

Detailed Drawings

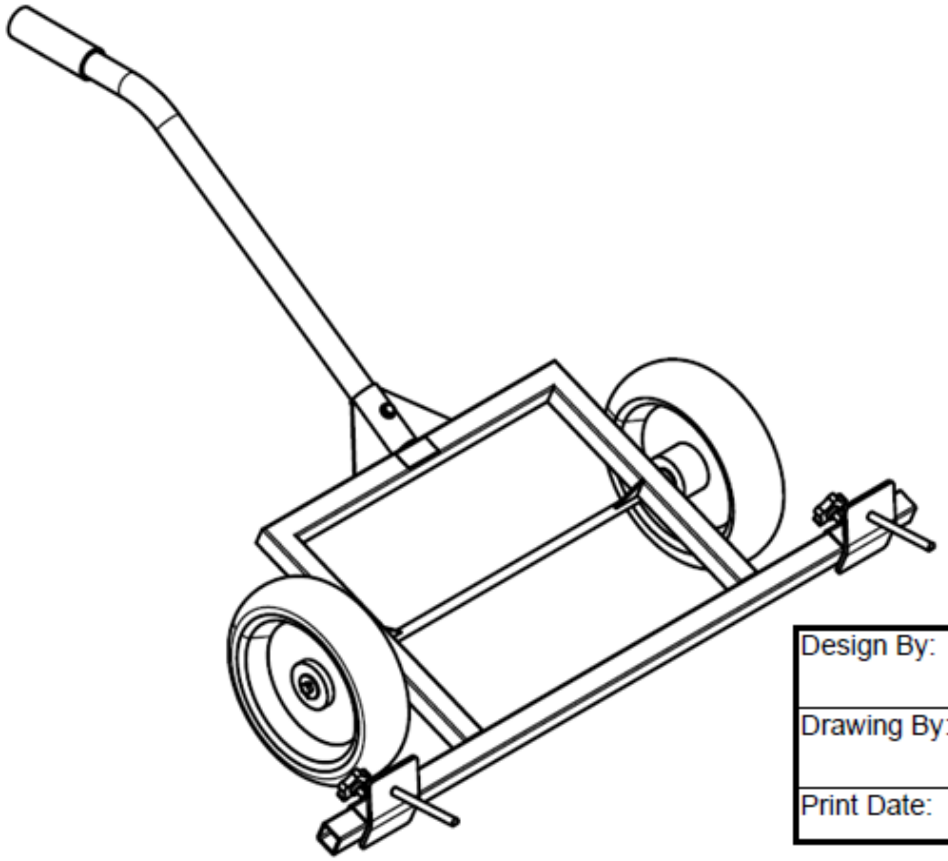

Sheet No.	Index of Sheets
1	Title Sheet
2	General Notes
3	Stock List
4	Bill of Materials
5	Part Drawings: ST-1, ST-2, ST-4, & H-2
6	Part Drawings: H-1
7	Part Drawings: CF-2, CF-7, & ST-3
8	Part Drawings: CF-3, CF-4, & CF-5
9	Part Drawings: CF-1, CF-6
10	Subassembly Drawings: SA-1
11	Subassembly Drawings: SA-2
12-13	Subassembly Drawings: SA-3
14	Main Assembly Drawing: SPBIC-1

Design By: B. Manguso	Project: Snow Plow Blade Installer Cart		
Drawing By: J. McDowell	Subset: Title Sheet		
Print Date: 12/08/2021	Subset Sheets: 1 of 1	Sheet Number: 1	

Carts should be fabricated and welded by someone certified

Bill of Materials

Bill of Materials						
Part ID			Part Description	Subassy Qty	Main Assy Qty	Total Qty	Drawing on Sheet No.
SPBIC-1			Snow Plow Blade Installer Cart Main Assembly	n/a	n/a	1	14
	SA-1		Sliding Tine Subassembly	n/a	2	2	10
		ST-1	Tine	1	n/a	2	5
		ST-2	Face	1	n/a	2	5
		ST-3	Face brace	1	n/a	2	7
		ST-4	Slide	1	n/a	2	5
		S-1	3/8"-16 hex nut	1	n/a	2	n/a
		S-2	1/2"-13 hex nut	1	n/a	2	n/a
	SA-2		Handle Subassembly	n/a	1	1	11
		H-1	Handle	1	n/a	1	6
		H-2	Grip	1	n/a	1	5
	SA-3		Cart Frame Subassembly	n/a	1	1	12-13
		CF-1	Axle	1	n/a	1	9
		CF-2	Axle brace	2	n/a	2	7
		CF-3	Frame - forward member	1	n/a	1	8
		CF-4	Frame - side member	2	n/a	2	8
		CF-5	Frame - rear member	1	n/a	1	8
		CF-6	Handle mount	1	n/a	1	9
		CF-7	Handle mount brace	2	n/a	2	7
		S-3	5/8" washer	2	n/a	see S-3 below	n/a
		S-4	Warning label	1	n/a	1	n/a
	S-3		5/8" washer	n/a	2	4	n/a
	S-5		3/32" x 1" cotter pin	n/a	2	2	n/a
	S-6		13 5/16" flat-free wheel, 5/8" bore, 250lb+ load rating	n/a	2	2	n/a
	S-7		3/8"-16 x 2 1/2" hex bolt	n/a	1	1	n/a
	S-8		3/8" washer	n/a	2	2	n/a
	S-9		3/8"-16 nylon insert lock nut	n/a	1	1	n/a
	S-10		Knob, 3/8"-16 threaded stud, 1" stud length	n/a	2	2	n/a

Plow Blade Installer Cart Benefits and Lessons Learned

Benefits

- Minimizes hazards during blade removal/replacement
- Lowers costs by preventing workplace injuries
- Speeds up the process, with one person replacing the blade in under a minute
- Boosts efficiency, enabling faster processing of vehicles
- Enhances customer service with quicker snowplow deployment

Estimated Costs vs Quantifiable Benefits

Benefits

- 19 hand injuries related to blade changes between November 2020 and April 2023
- Average cost per hand injury is $19,000

Costs

- Built using a certified welder at $708 per cart
- Built 14 carts for $9,900 (funded through Lean Everyday Ideas)
- Built 12 carts for $8,500 (funded through Office of Transportation)

Lessons Learned

- Become more efficient with tools provided
- Make the work we do safer by eliminating hazards

Question and Answer Session

Thank you!

aii.transportation.org